LRDR9G91-2I Memory Expansion Card

Quick Reference Guide

Rev. 1.0

Release 2024-05-28

Catalogue

1 Summary ····· 4
2 Suitable ····· 4
3 Product Introduction ····· 4
4 Configuration Requirements ····· 4
5 Feature ····· 4
6 OS Support ····· 4
7 Appearance structure ····· 4
8 Appearance Specifications ····· 6
9 Install ····· 6
10 Typical Applications ····· 10

Copyright© Linkreal Co.,Ltd.

Copyright© Linkreal Co.,Ltd. 2024. All rights reserved.
Without the written permission of our company, no unit or individual may extract or copy part or all of the contents of this document without authorization, and may not spread it in any form.

Announce

This manual is for reference only and is subject to change without prior notice. It does not mean that Lianrui Electronics promises that Lianrui Electronics will not bear direct, indirect, special, accidental or corresponding damages caused by the use of products or documents, nor does it apply to any infringement.

Copyright and trademark

This document contains proprietary information of copyright protection and all rights reserved. No part of this document may be reproduced by any mechanical, electronic or other means in any form without the written permission of the manufacturer. The company/product names mentioned here are only for identification purposes.

1 Summary

This guide introduces the product appearance, functions and basic usage of LRDR9G91-2I memory expansion card.

2 Suitable

* Enterprise administrators
* Technical operation and maintenance personnel
* Equipment operator

3 Product Introduction

LRDR9G91-2I memory expansion card (hereinafter referred to as LRDR9G91-2I) is a PCIe memory expansion card for 5th/4th Generation Intel Xeon Family Processors or equivalent platforms, which is used to expand the memory capacity of the server.

4 Configuration Requirements

CPU, 4th/5th Gen Intel® Xeon with CXLsupport

Slots, PCIe Gen5 x8 slots or PCIe Gen5 x16 slots with CXL support (FHFL or HHFL)

5 Feature

- Memory expansion cards support CXL.men and CXL.io protocols.
- comply with JEDEC DDR5 RDIMM specification.
- Support dual-slot DDR5 DIMM slots, with a maximum support of 5600 mt/s.
- Comply with CXL1.1 and CXL2.0 spec.
- Support PCIe 5.0 x8 interface.
- 2U height.

6 OS Support

Linux Kernel OS is recommended.

7 Appearance structure

The main components of LRDR9G91-2I are shown in the following figure.

Copyright© Linkreal Co.,Ltd.

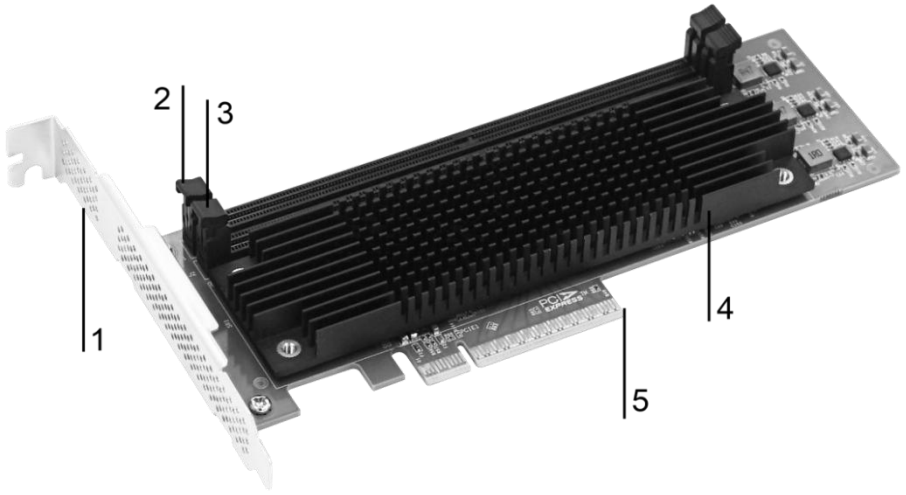

Identification	Name	Description
1	Bracket	expansion card Bracket , Support half height and full height. (The default installation is full-height baffle.).
2	J1 Slot	The first DIMM slot, RDIMM DDR5. (When only one DDR is installed, it needs to be installed in the J1 slot.)
3	J2 Slot	The second DIMM slot, RDIMM DDR5.
4	Radiator	Used for heat dissipation of LRDR9G91-2I.
5	PCIe Interface	PCIe slot used to connect to the server motherboard(Slots that can support CXL can be checked and confirmed through the server specification or contact the server manufacturer).

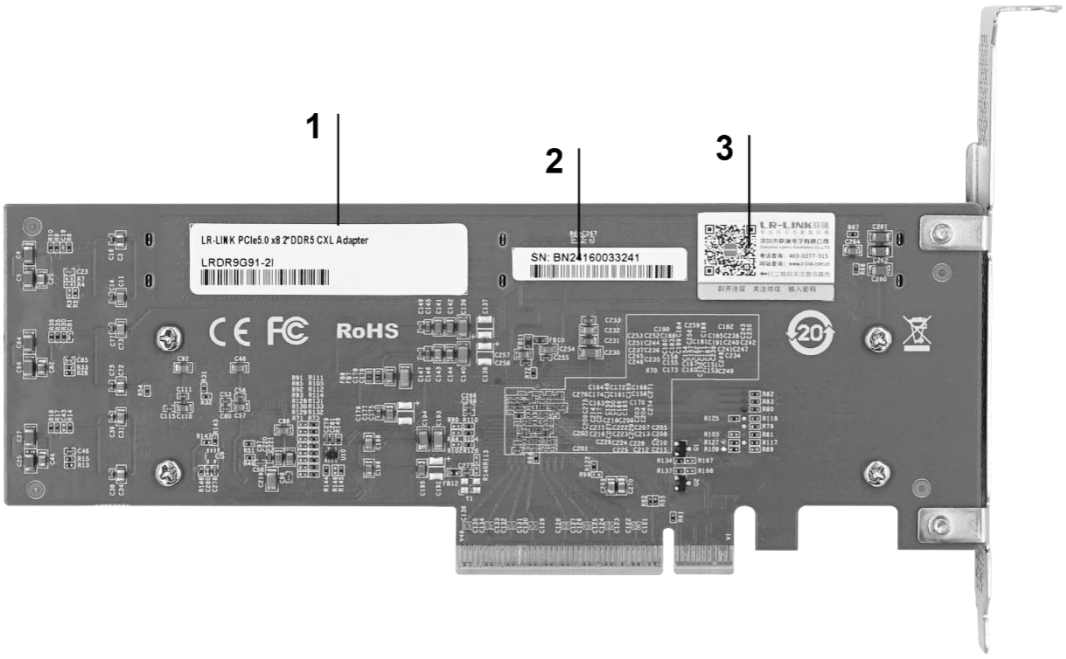

Copyright© Linkreal Co.,Ltd.

Identification	Name	Description
1	P/N label	P/N information for expansion cards
2	S/N label	S/N information for expansion cards
3	Anti-counterfeiting label	LR-LINK brand label

8 Appearance Specifications

The physical specifications of LRDR9G91-2I are as follows.

Item	Parameter
Size without DDR (h X w X d)	21.6mm x 120mm x 182.5mm (FHFL with bracket)
No load power consumption	11.184W
PCIe bandwidth	PCIe 5.0 x8 (32GT/s)
DDR support quantity	2
Protocol type	CXL2.0
DDR support form	DDR5 (up to 5600MT/s)

9 Install

Note: Before installation, it is necessary to consult the motherboard specifications or consult the supplier to confirm that LRDR9G91-2I can be installed on PCIe slots that support CXL. As shown in the motherboard specification sheet below, it has CXL functionality on the PCIe x16 slot.

- Intel Trusted Domain Extensions(TDX) support (5th Gen. Intel Xeon Scalable Processors)

Note 1: Each processor can support up to four CXL devices, and each CXL device will occupy one PCIe x16 root port.

Note 2: To avoid possible system overheating, please be sure to provide adequate airflow to your system.

LRDR9G91-2I is shipped with a full height baffle and a half height bracket that is not installed by default. The half height bracket is usually used on devices used for small chassis.

Please install the board as follows:

4.1 Turn off the power supply for servers that require the installation of expansion cards! Prevent electric shock accidents from occurring;

Copyright© Linkreal Co.,Ltd.

4.2 Wear anti-static wristbands (or gloves), take anti-static measures before touching the expansion card, and also to prevent electric shock to operators;

4.3 Installing DIMM memory;

4.3.1 Open the plastic on both sides of the RDIMM slot.

4.3.2 Insert the RDIMM memory module vertically into the RDIMM slot and push it down (if only one RDIM is installed, it needs to be installed in the J1 slot position).

4.3.3 Close the plastic clips on both sides of the RDIMM slot to lock the RDIMM module.

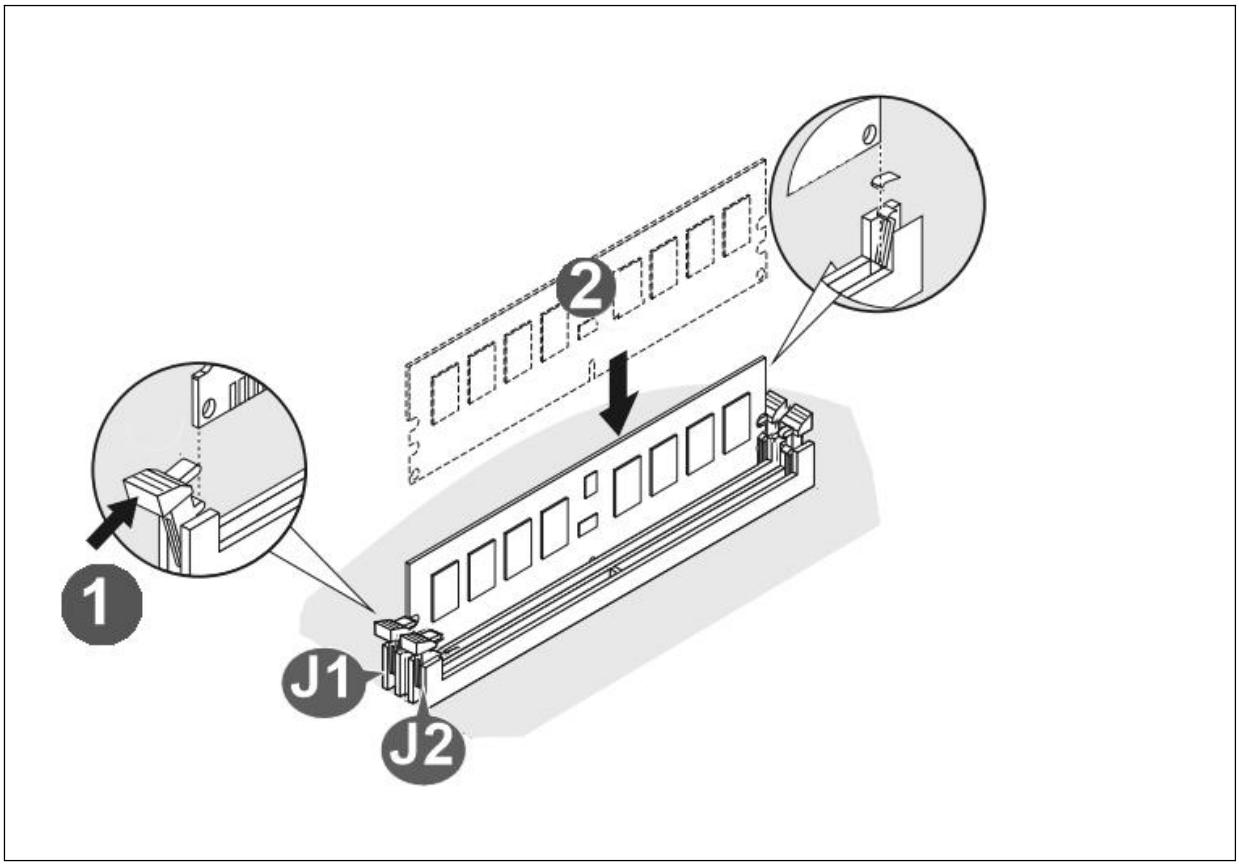

4.3 Determine the slot location on the server; LRDR9G91-2I can be installed on PCIe 5.0 x8/x16 slots.

Copyright© Linkreal Co.,Ltd.

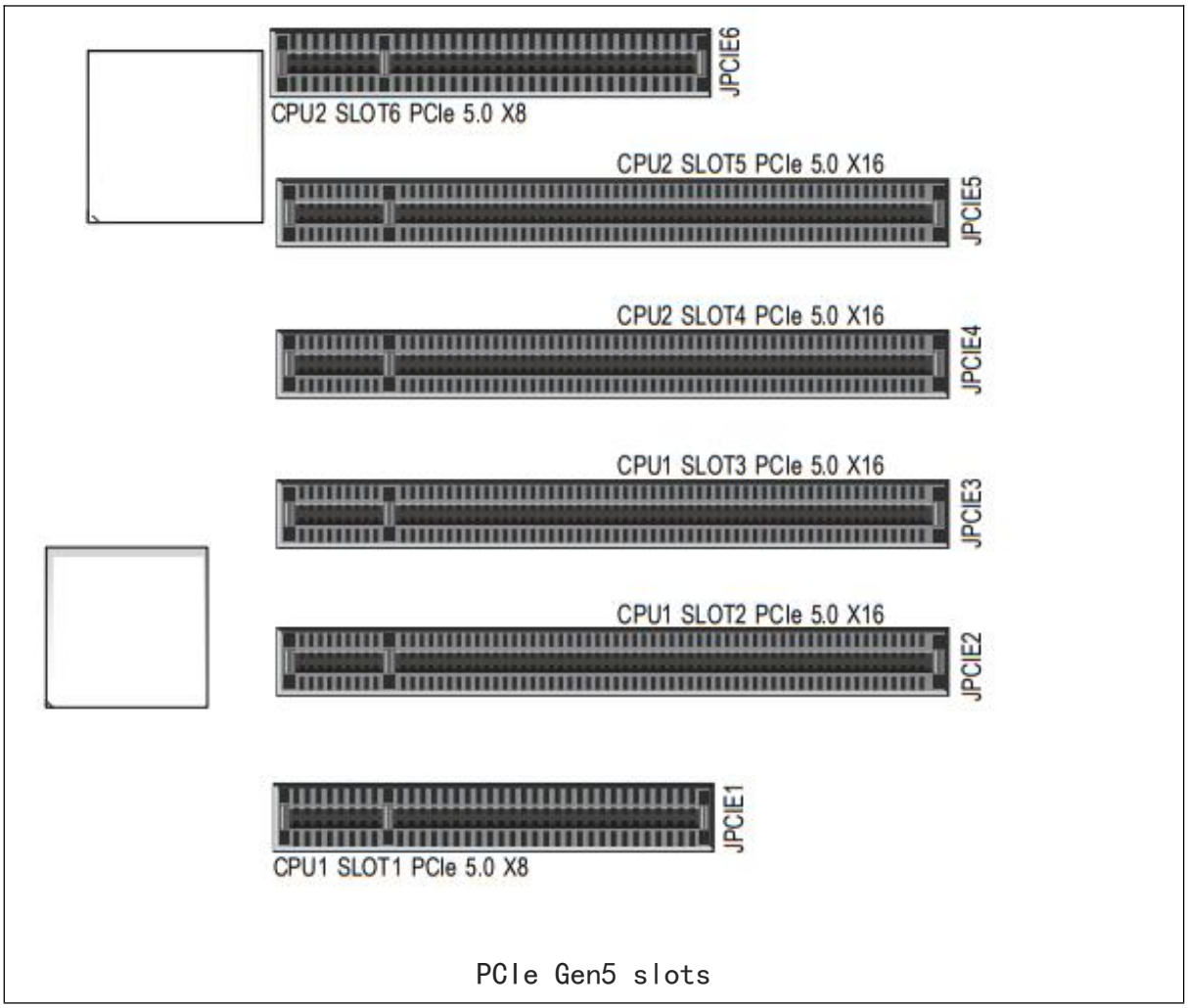

PCIe Gen5 slots

4.1 If the server contains a reference to the PCIe Riser card component, install it as shown in the diagram (if it does not contain a PCIe Riser card component, skip the PCIe Riser card component installation section directly), and follow the following steps to install LRDR9G91-2I as shown in the diagram:

4.4.1 Loosen the screws on the internal baffle of the system.

4.4.2 Remove the PCIe riser card from the system①.

4.4.3 Remove the screws that secure the slot cover from the PCIe riser card②.

4.4.4 Align LRDR9G91-2I with the vertical guide groove and push it in the direction of the arrow until LRDR9G91-2I is inserted into the PCIe card connector③.

4.4.5 Secure LRDR9G91-2I to PCIe riser card with screws③.

4.4.6Repeat steps 2-1 to install the PCIe riser card into the system.

Copyright© Linkreal Co.,Ltd.

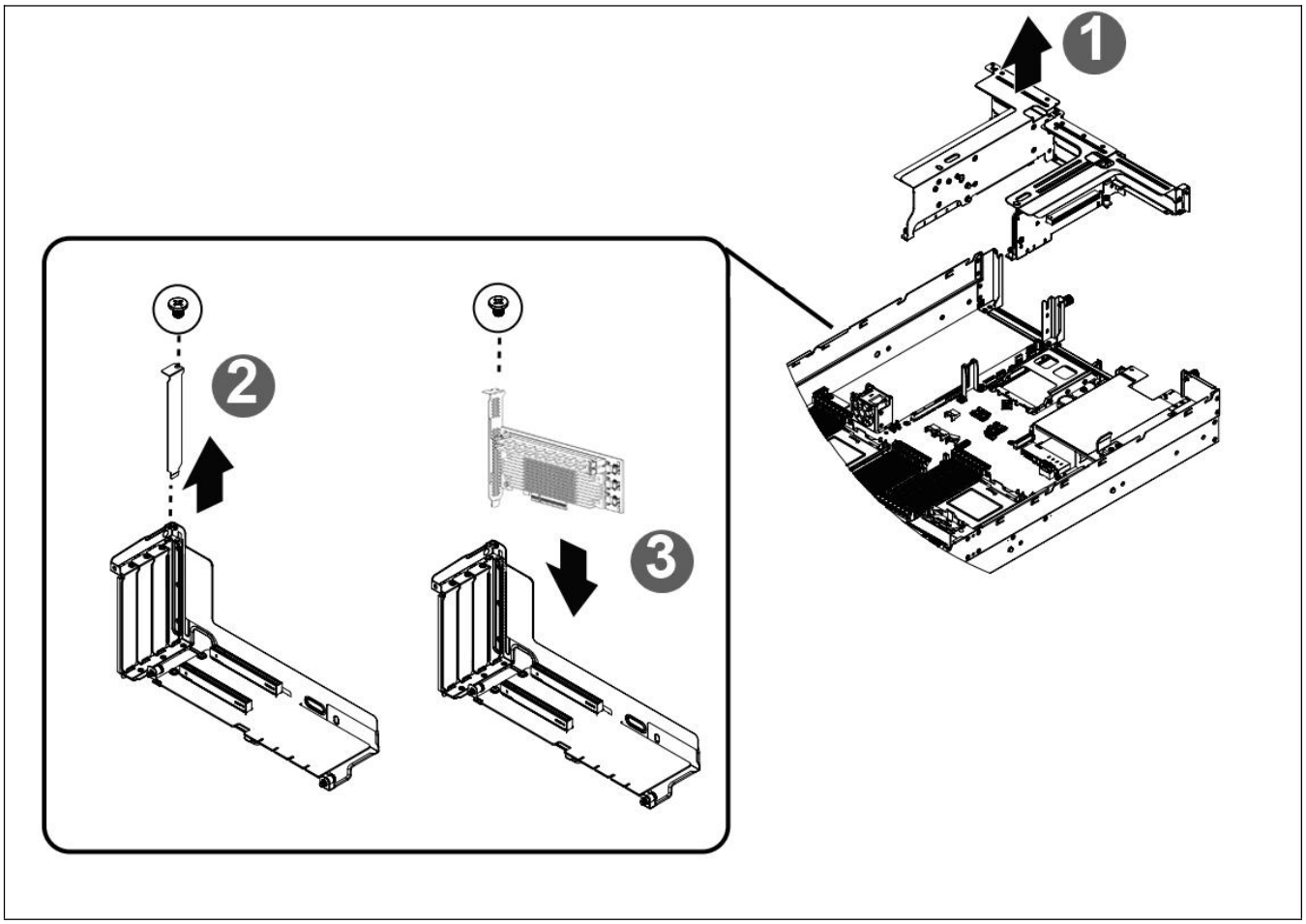

4.1 Complete other installation and fixation of the server, and perform power on operation on the server;

4.2 LRDR9G91-2I can be used without the need for a driver program; After the server is turned on, the memory capacity under the system can be queried to confirm that the RDIMM installed on LRDR9G91-2I has been correctly recognized.

4.2.1 After entering the BIOS setup program, enter the main menu (Main);

Under the main menu, it can be found that the server has read all the capacity information (such as BIOS -->Main -->Memory Information -->Total Memory).



4.2.2 Enter the operating system to view the loaded DDR (linux) ;

#free -m

Copyright© Linkreal Co.,Ltd.

or

#vmstat -s

4.2.3 Enter the operating system to view the loaded DDR (linux) ;

#lspci |grep -I cxl

```
link@link-System-Version:~/桌面$ lspci |grep -i cxl
17:00.0 CXL: Montage Technology Co., Ltd. Device c001 (rev 01)
```

The installation of the LRDR9G91-2I memory expansion card is complete.

10 Typical Applications

Memory expansion

It can solve problems such as memory bandwidth bottlenecks and capacity limitations encountered in computationally intensive devices such as big data models, artificial intelligence (AI), high-performance computing, and machine learning. When these capacities exceed the range that the current device can provide and are expanded in a traditional way, it will be limited by CPU design limitations and other issues, and often the PCIe resources on this type of server device will be relatively abundant. Therefore, it can be switched to a CXL solution as the main solution, which is more flexible in actual operation. The following is a diagram of possible memory expansion:

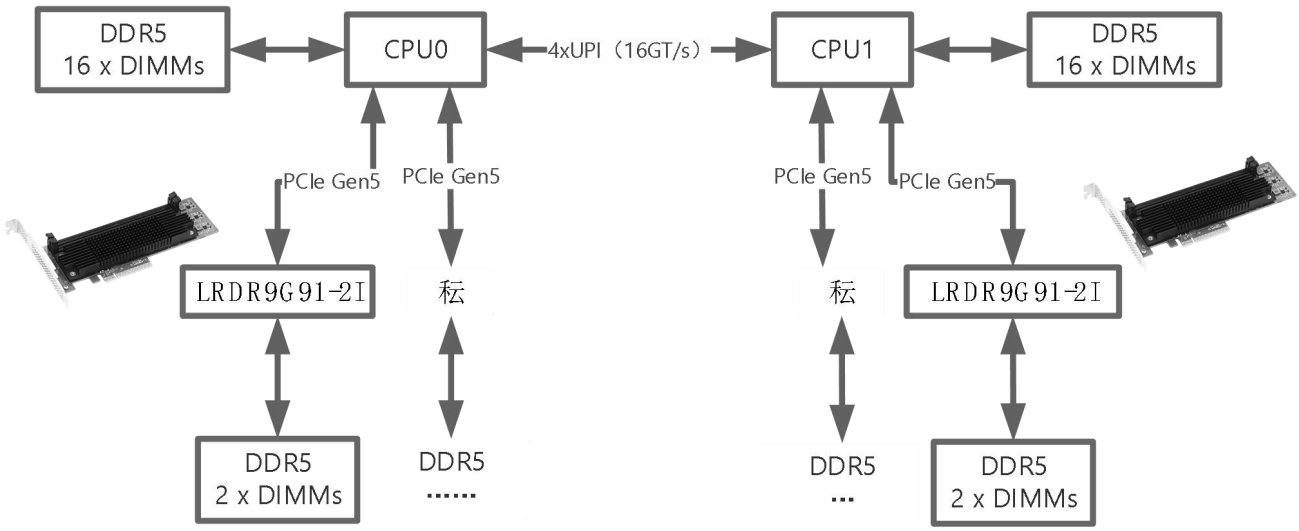

Modifying

Version information	Date	Description
V1.0	2024-5-27	First edition release

Copyright© Linkreal Co.,Ltd.